A SIZE	PROJECTIONS

TOLERANCES UNLESS OTHERWISE SPECIFIED:			
PLACES		INCHES	NOTES:
.XX	±	.030	ACCEPTABLE BURR ± 10% OF MATERIAL THICKNESS
.XXX	±	.015	ALL TOLERANCES ARE NON-CUMULATIVE
.XXXX	±	.005	ALL DIMENSIONS APPLY TO PART BEFORE ANY
ANGLE	±	3°	FINISH IS APPLIED

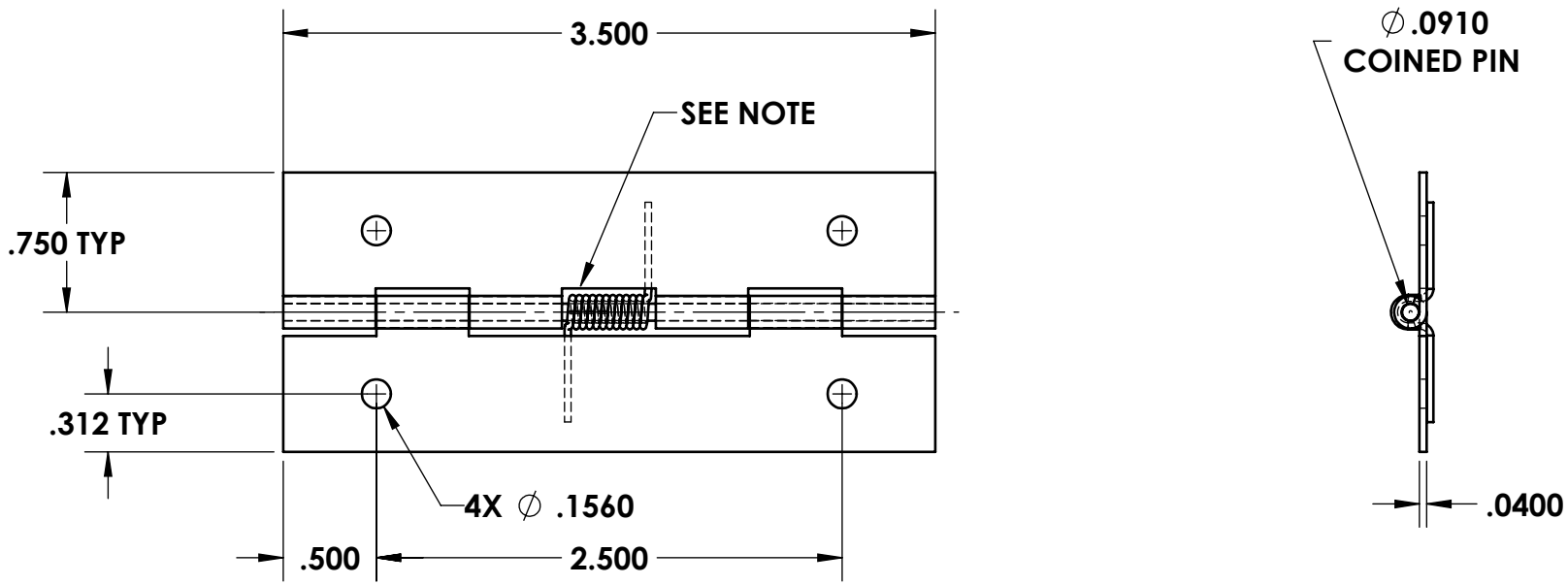

NOTES:
1. FINISH: 105- BARREL ZINC AND CLEAR TRIVALENT CHROMATE (PIN MAY BE NICKEL PLATED)
2. SPRING: LOADED TO CLOSE, (1) PLACE, .035 STS WIRE DIA., .57 LEGS
3. KNUCKLES: .50 REF.

REV.	DESCRIPTION	DATE	APPD
D	CHANGED FINISH	09/08/2021	JG
C	CONVERTED, SPRING NOTE	01/09/2018	JG
B	CHANGED SPRING	01/18/2013	JG
A	CHANGED FINISH	12/28/2012	JG

REVISIONS

DWG #: PS1121-02		SCALE	1:1	CODE IDENT. #
		DATE	05/09/2001	03007
MATERIAL: PS	FINISH: SEE NOTE	GUDEN INDUSTRIAL HARDWARE MADE EASY		
DR. BY: RAG	CK. BY: CD			

FAX: 1-631-737-2933
EMAIL: info@guden.com
WEB: www.guden.com

99 RAYNOR AVE.
RONKONKOMA, N.Y. 11779
1-800-3-HINGES