A SIZE	PROJECTIONS

TOLERANCES UNLESS OTHERWISE SPECIFIED:

PLACES		INCHES	NOTES:
.XX	±	.030	ACCEPTABLE BURR ± 10% OF MATERIAL THICKNESS
.XXX	±	.015	ALL TOLERANCES ARE NON-CUMULATIVE
.XXXX	±	.005	ALL DIMENSIONS APPLY TO PART BEFORE ANY
ANGLE	±	3°	FINISH IS APPLIED

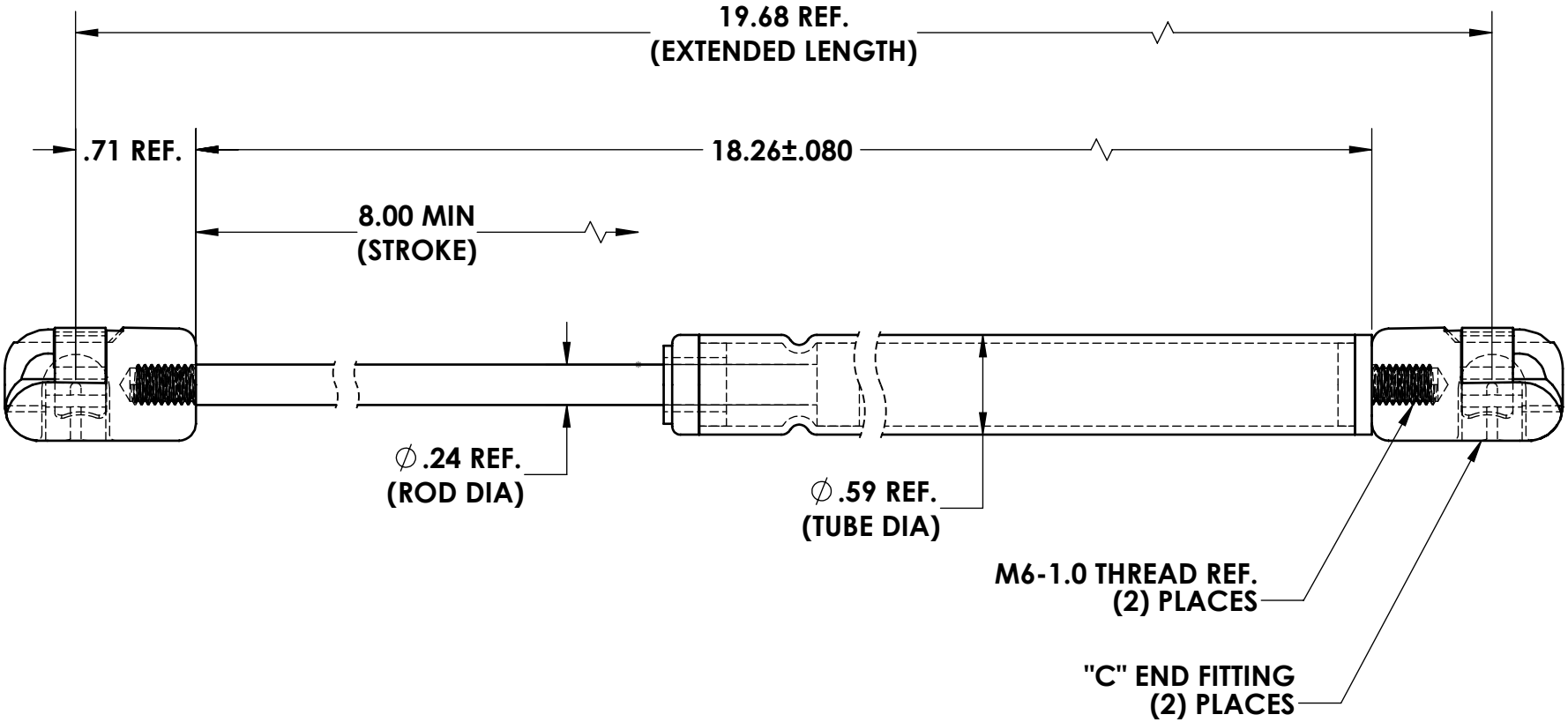

NOTES:

1. FINISH: 51A BLACK PAINT (TUBE) AND BLACK NITRIDE (ROD)
2. PART MARK WITH GUDEN P/N AND DATE CODE
3. P1 FORCE = 100 LBS ± 7.0 LBS

REV.	DESCRIPTION	DATE	APPD
A	CONVERTED	10/05/2017	JG

REVISIONS

DWG #: GGN48-100-C	SCALE 1:1	CODE IDENT. #
	DATE 06/27/2016	03007
MATERIAL: PS	FINISH: SEE NOTE	
DR. BY: RAG	CK. BY: JPG	

GUDEN
INDUSTRIAL HARDWARE MADE EASY

FAX: 1-631-737-2933
EMAIL: info@guden.com
WEB: www.guden.com

99 RAYNOR AVE.
RONKONKOMA, N.Y. 11779
1-800-3-HINGES