A
SIZE

PROJECTIONS

TOLERANCES UNLESS OTHERWISE SPECIFIED:

PLACES		INCH
.XX	±	.030
.XXX	±	.015
.XXXX	±	.005
ANGLE	±	3°

NOTE:
ACCEPTABLE BURR ± 10% OF MATERIAL THICKNESS
ALL TOLERANCES ARE NON-CUMULATIVE
ALL DIMENSIONS APPLY TO PART BEFORE ANY FINISH IS APPLIED

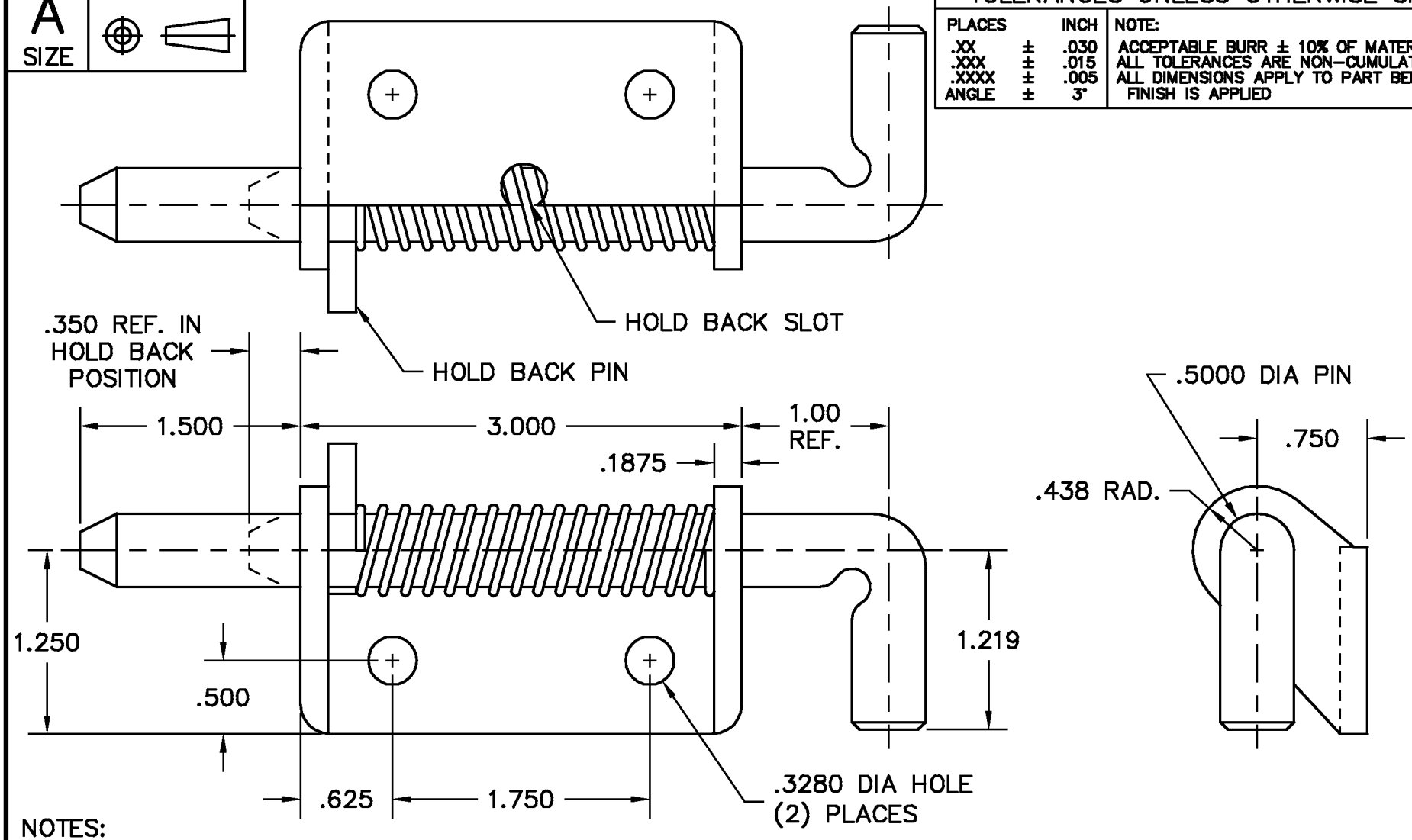

NOTES:
1. FINISH: 00- NO FINISH
2. THRU HOLE (2 PL) TO BE // WITHIN .020 OF BOTTOM. REF. .750 DIM.

LTR	DESCRIPTION	DATE	APPD
	REVISION		

DWG 9297LH-32-HB	SCALE 1:1	CODE IDENT. #
	DATE 05/27/03	03007
MATERIAL STS	FINISH SEE NOTE	
DR. BY RAG	CK. BY CD	

GUDEN
DELIVERING HARDWARE EXCELLENCE

FAX: 1-631-737-2933
EMAIL: info@guden.com
WEB: www.guden.com

99 RAYNOR AVE.
RONKONKOMA, N.Y. 11779
1-800-3-HINGES