A SIZE	PROJECTIONS

TOLERANCES UNLESS OTHERWISE SPECIFIED:			
PLACES		INCH	NOTE:
.XX	±	.030	ACCEPTABLE BURR ± 10% OF MATERIAL THICKNESS
.XXX	±	.015	ALL TOLERANCES ARE NON-CUMULATIVE
.XXXX	±	.005	ALL DIMENSIONS APPLY TO PART BEFORE ANY FINISH IS APPLIED
ANGLE	±	3°	

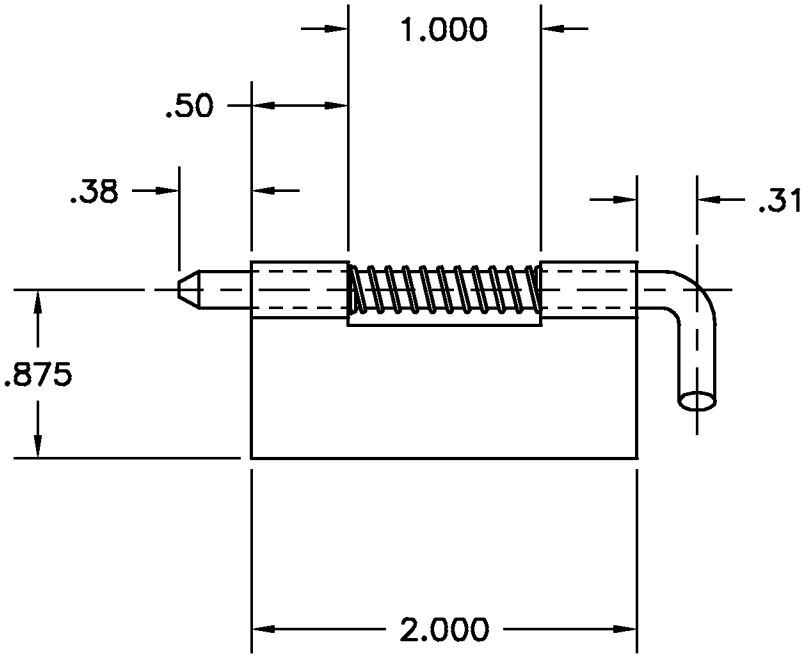

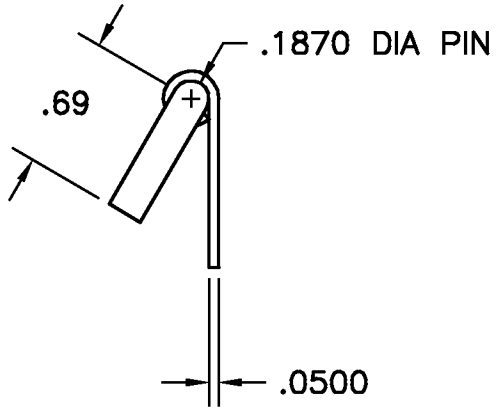

NOTES:
1. FINISH: 105- BARREL ZINC AND CLEAR TRIVALENT CHROMATE
2. MATERIAL: LEAF & PIN = PS
SPRING & CLIP = STS

LTR	DESCRIPTION	DATE	APPD
C	VARIOUS CHANGES	11/21/12	JG
B	ADDED PIN DIMS	01/16/06	CD
A	MATERIAL NOTE	10/05/05	CD

REVISION

DWG 9294LH-02		SCALE	1:1	CODE IDENT. #
		DATE	05/01/95	03007
MATERIAL SEE NOTE	FINISH SEE NOTE			
DR. BY RAG	CK. BY RK			

GUDEN
DELIVERING HARDWARE EXCELLENCE

FAX: 1-631-737-2933
EMAIL: info@guden.com
WEB: www.guden.com

99 RAYNOR AVE.
RONKONKOMA, N.Y. 11779
1-800-3-HINGES