A SIZE	PROJECTIONS

TOLERANCES UNLESS OTHERWISE SPECIFIED:			
PLACES		INCH	NOTE:
.XX	±	.030	ACCEPTABLE BURR ± 10% OF MATERIAL THICKNESS
.XXX	±	.015	ALL TOLERANCES ARE NON-CUMULATIVE
.XXXX	±	.005	ALL DIMENSIONS APPLY TO PART BEFORE ANY FINISH IS APPLIED
ANGLE	±	3°	

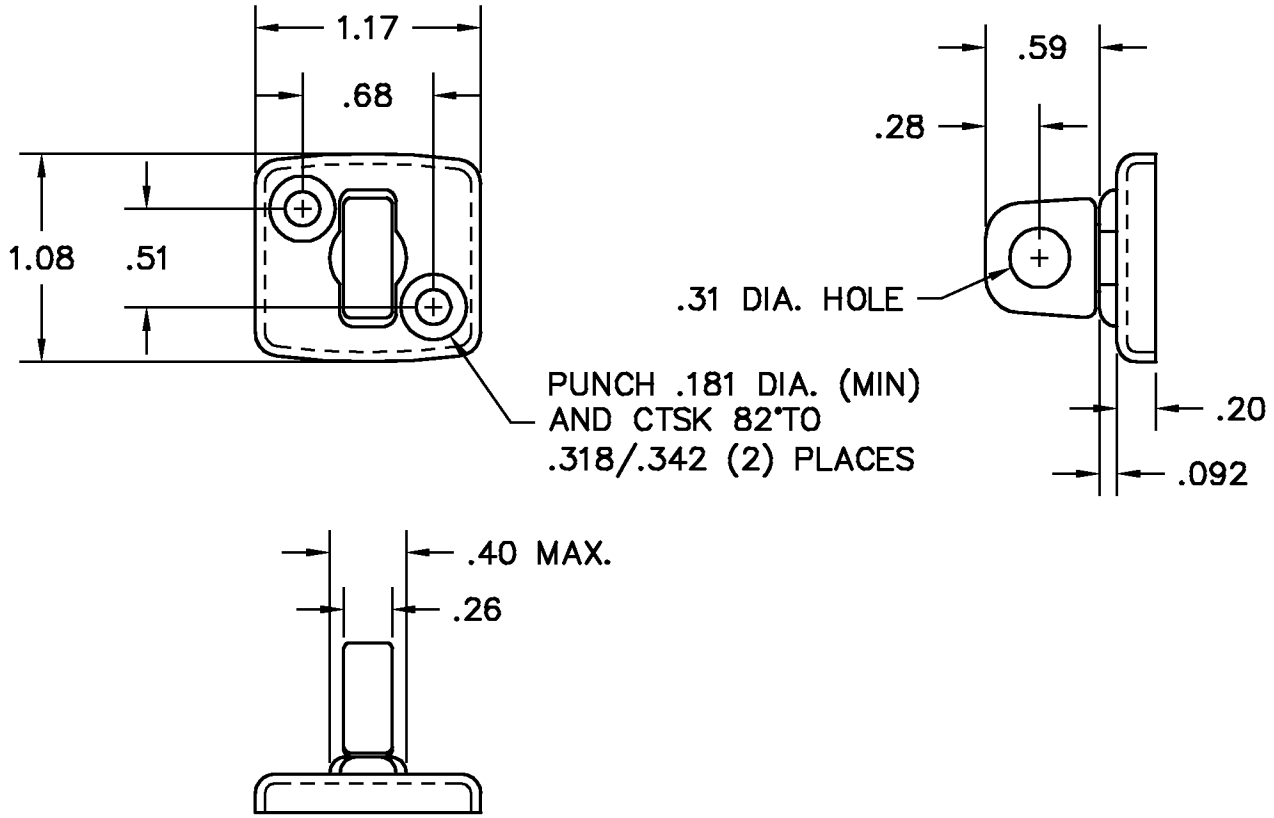

NOTES:
1. FINISH: 21 – ELECTRO POLISH

LTR	DESCRIPTION	DATE	APPD
REVISION			
B	.26 WAS .25	08/23/99	CD
A	REDRAWN	08/17/99	CD

DWG		SCALE	1:1	CODE IDENT. #
STS914		DATE	08/17/99	03007
MATERIAL	FINISH			
STS	SEE NOTE			
DR. BY RAG	CK. BY CD			

FAX: 1-631-737-2933
EMAIL: info@guden.com
WEB: www.guden.com

GUDEN
DELIVERING HARDWARE EXCELLENCE

99 RAYNOR AVE.
RONKONKOMA, N.Y. 11779
1-800-3-HINGES