A SIZE	PROJECTIONS

TOLERANCES UNLESS OTHERWISE SPECIFIED:			
PLACES		INCHES	NOTES:
.XX	±	.030	ACCEPTABLE BURR ± 10% OF MATERIAL THICKNESS
.XXX	±	.015	ALL TOLERANCES ARE NON-CUMULATIVE
.XXXX	±	.005	ALL DIMENSIONS APPLY TO PART BEFORE ANY
ANGLE	±	3°	FINISH IS APPLIED

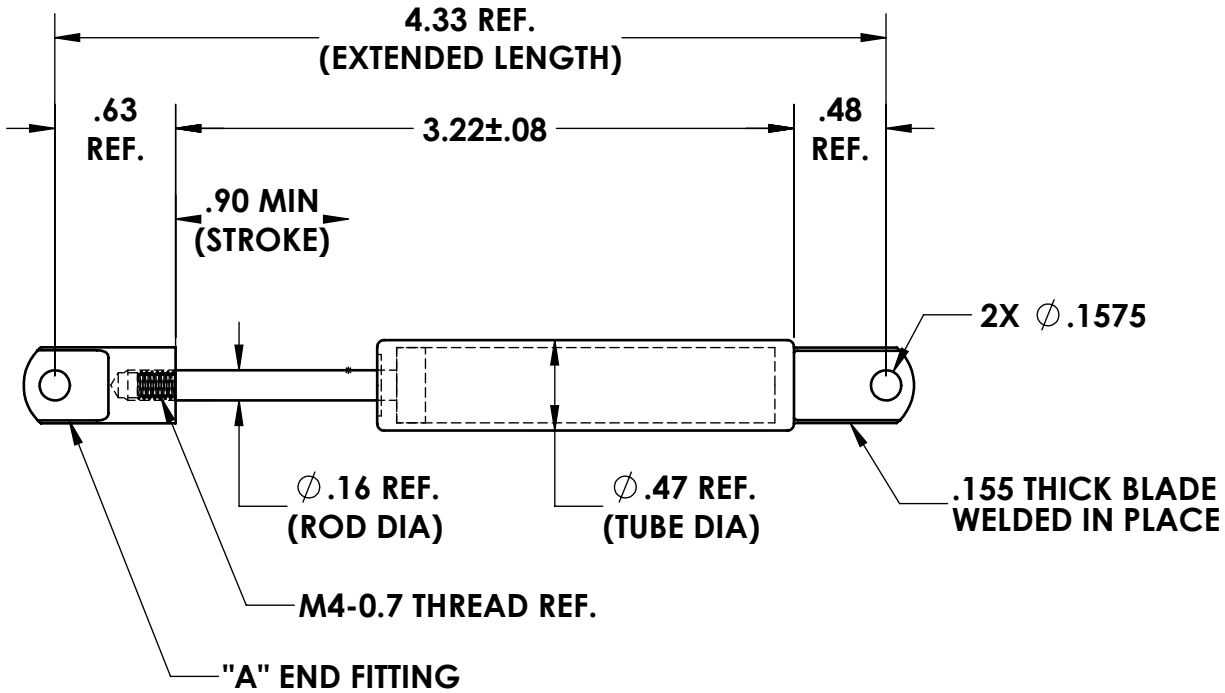

NOTES:
1. FINISH: 00- NO FINISH
2. PART MARK WITH GUDEN P/N AND DATE CODE
3. P1 FORCE = 10 lbs ± 4.0 lbs

REV.	DESCRIPTION	DATE	APPD
A	VARIOUS CHANGES	01/08/2019	JG

REVISIONS

DWG #: STS51-010-A		SCALE	1:1	CODE IDENT. #
		DATE	08/30/2018	03007
MATERIAL: 316-STS	FINISH: SEE NOTE	GUDEN INDUSTRIAL HARDWARE MADE EASY		
DR. BY: RAG	CK. BY: JPG			

FAX: 1-631-737-2933
EMAIL: info@guden.com
WEB: www.guden.com

99 RAYNOR AVE.
RONKONKOMA, N.Y. 11779
1-800-3-HINGES