A SIZE	PROJECTIONS

TOLERANCES UNLESS OTHERWISE SPECIFIED:			
PLACES		INCH	NOTE:
.XX	±	.030	ACCEPTABLE BURR ± 10% OF MATERIAL THICKNESS
.XXX	±	.015	ALL TOLERANCES ARE NON-CUMULATIVE
.XXXX	±	.005	ALL DIMENSIONS APPLY TO PART BEFORE ANY FINISH IS APPLIED
ANGLE	±	3°	

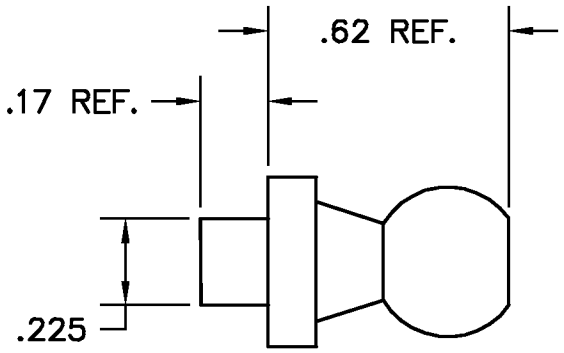

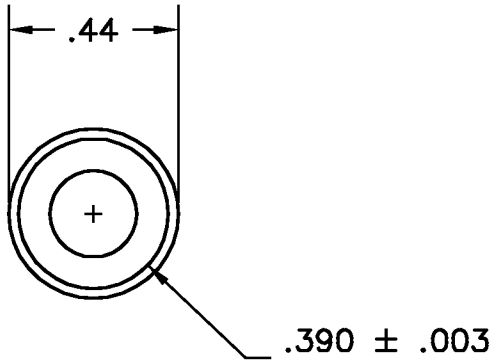

NOTES:
1. FINISH: 200- ZINC PER ASTM B633 SC1 TYPE I
2. BLANK STUD FOR RIVITING
3. AVAILABLE FOR USE WITH GUDEN END FITTINGS EF030, EF090 AND EF110.

LTR	DESCRIPTION	DATE	APPD
	REVISION		
B	VARIOUS CHANGES	01/04/11	JG
A	.225 WAS .250	11/09/06	CD

DWG		SCALE	2:1	CODE IDENT. #
BS103-02		DATE	08/26/04	03007
MATERIAL	FINISH	GUDEN DELIVERING HARDWARE EXCELLENCE		
PS	SEE NOTE			
DR. BY RAG	CK. BY CD			

FAX: 1-631-737-2933
EMAIL: info@guden.com
WEB: www.guden.com

99 RAYNOR AVE.
RONKONKOMA, N.Y. 11779
1-800-3-HINGES