A SIZE	PROJECTIONS

TOLERANCES UNLESS OTHERWISE SPECIFIED:

PLACES		INCH
.XX	±	.030
.XXX	±	.015
.XXXX	±	.005
ANGLE	±	3°

NOTE:
ACCEPTABLE BURR ± 10% OF MATERIAL THICKNESS
ALL TOLERANCES ARE NON-CUMULATIVE
ALL DIMENSIONS APPLY TO PART BEFORE ANY FINISH IS APPLIED

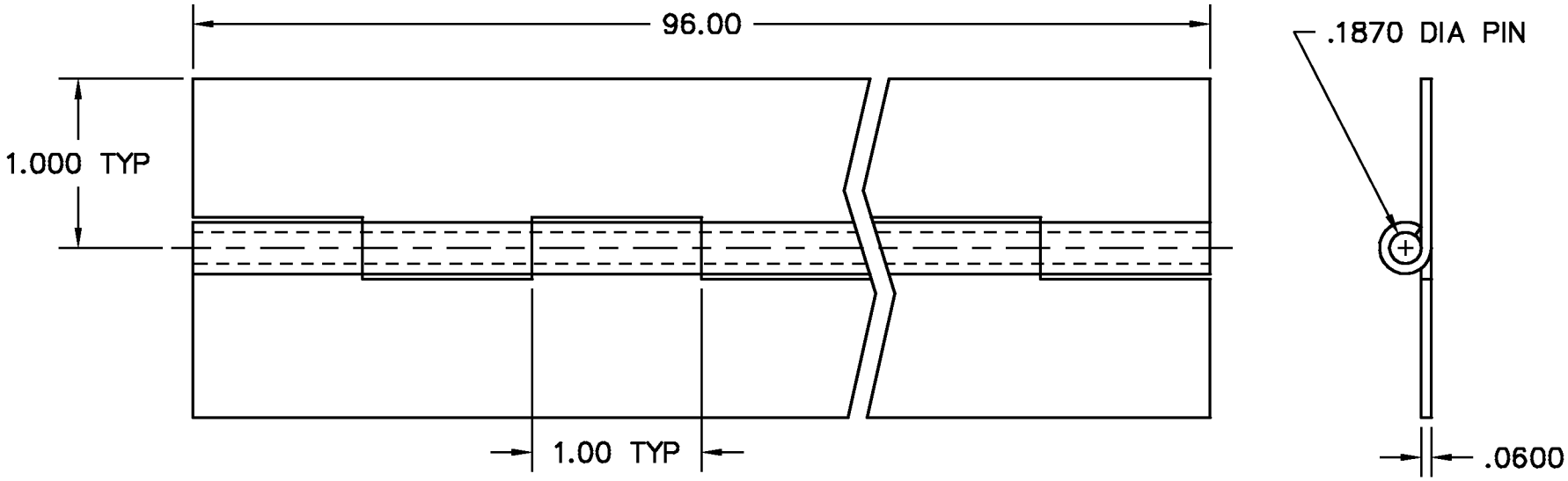

NOTES:
1. FINISH: 00- NO FINISH

DWG	SCALE	1:1	CODE IDENT. #
PS07070708-96	DATE	09/08/04	03007
MATERIAL: PS	FINISH: SEE NOTE		
DR. BY RAG	CK. BY CD		

GUDEN
DELIVERING HARDWARE EXCELLENCE

FAX: 1-631-737-2933
EMAIL: info@guden.com
WEB: www.guden.com

99 RAYNOR AVE.
RONKONKOMA, N.Y. 11779
1-800-3-HINGES

LTR	DESCRIPTION	DATE	APPD
	REVISION		