A SIZE	PROJECTIONS

TOLERANCES UNLESS OTHERWISE SPECIFIED:

PLACES		INCH
.XX	±	.030
.XXX	±	.015
.XXXX	±	.005
ANGLE	±	3°

NOTE:
ACCEPTABLE BURR ± 10% OF MATERIAL THICKNESS
ALL TOLERANCES ARE NON–CUMULATIVE
ALL DIMENSIONS APPLY TO PART BEFORE ANY FINISH IS APPLIED

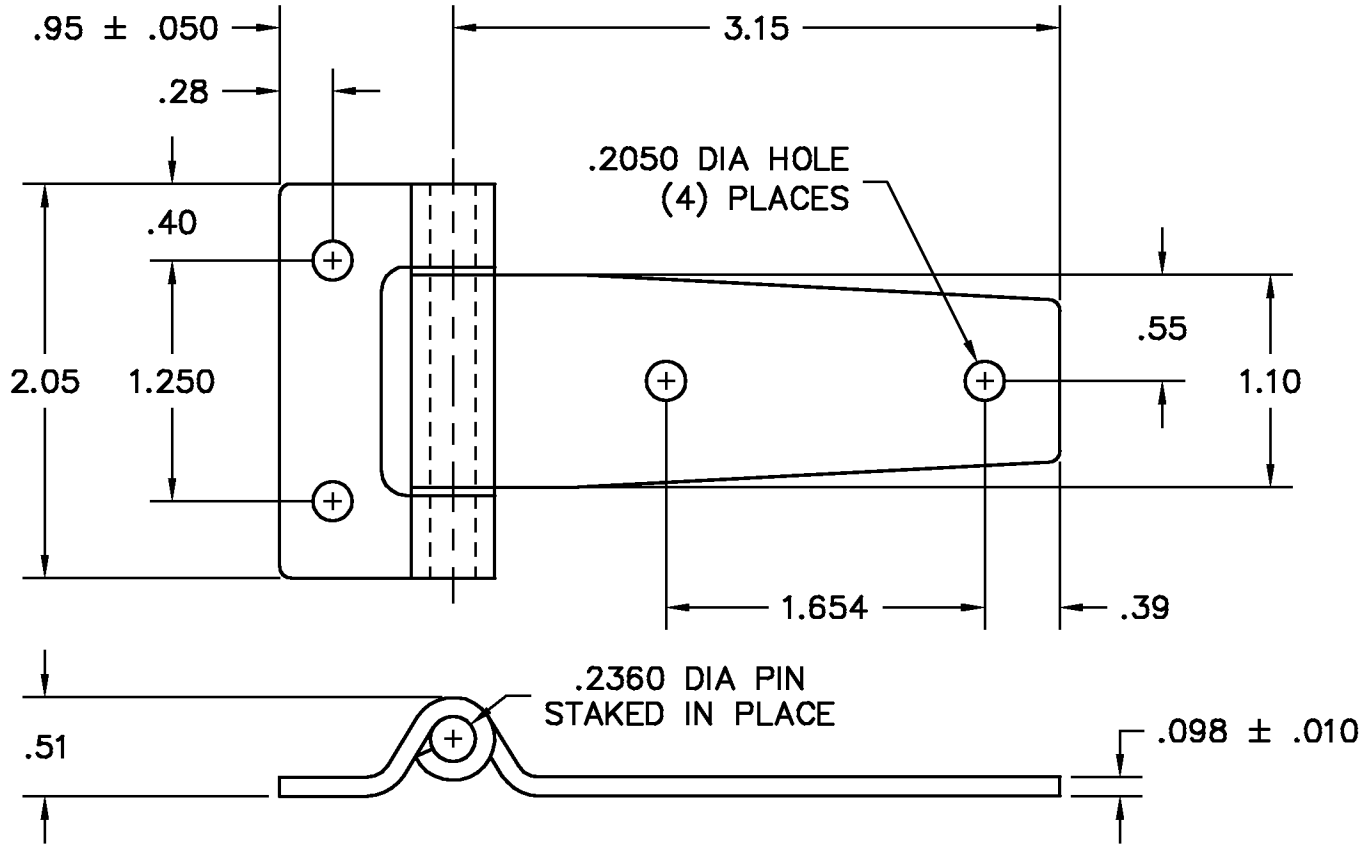

NOTES:
1. FINISH: 12– POLISH – TOPSIDE & KNUCKLE ALL AROUND

LTR	DESCRIPTION	DATE	APPD
A	.95 ± .050, .098 ± .010	06/11/10	DW

REVISION

DWG	SCALE	1:1	CODE IDENT. #
STRP0315RVA1	DATE	09/23/02	03007
MATERIAL: STS	FINISH: SEE NOTE		
DR. BY RAG	CK. BY CD		

GUDEN
DELIVERING HARDWARE EXCELLENCE

FAX: 1–631–737–2933
EMAIL: info@guden.com
WEB: www.guden.com

99 RAYNOR AVE.
RONKONKOMA, N.Y. 11779
1–800–3–HINGES