A SIZE	PROJECTIONS

TOLERANCES UNLESS OTHERWISE SPECIFIED:

PLACES		INCH
.XX	±	.030
.XXX	±	.015
.XXXX	±	.005
ANGLE	±	3°

NOTE:
ACCEPTABLE BURR ± 10% OF MATERIAL THICKNESS
ALL TOLERANCES ARE NON-CUMULATIVE
ALL DIMENSIONS APPLY TO PART BEFORE ANY FINISH IS APPLIED

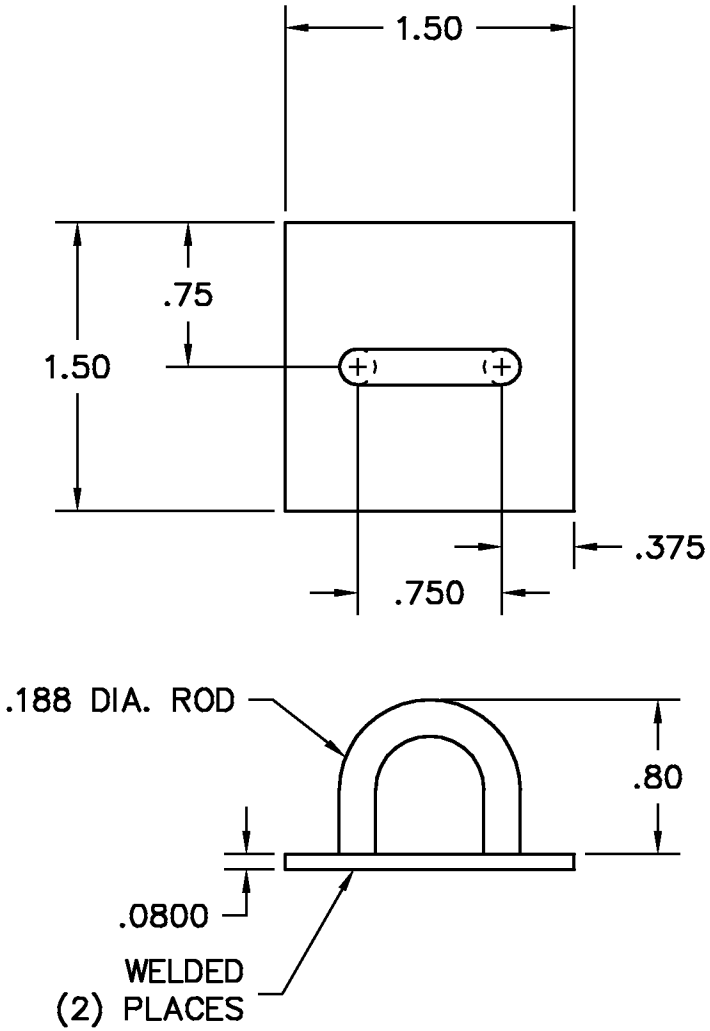

NOTES:
1. FINISH: 21- ELECTRO POLISH

LTR	DESCRIPTION	DATE	APPD
D	.0800 WAS .0750	11/13/13	JG
C	.80 WAS .813	08/15/12	JG
B	REDRAWN	04/12/99	CD
A	REDRAWN	12/26/91	AG

REVISION

DWG NHSTS9133

MATERIAL	FINISH
STS	SEE NOTE
DR. BY RAG	CK. BY CD

SCALE	1:1	CODE IDENT. #
DATE	04/12/99	03007

GUDEN
DELIVERING HARDWARE EXCELLENCE

FAX: 1-631-737-2933
EMAIL: info@guden.com
WEB: www.guden.com

99 RAYNOR AVE.
RONKONKOMA, N.Y. 11779
1-800-3-HINGES